Enlightening Expectations

LEI 6” LED Round Panel light, 12 watt 960 Lumen, ETL/cETL & Energy Star Approved

Specifications

Model#	LEIRP5-6-12W-XXXX
Description	6” Ultra-Slim LED Round Panel light
Power	12W
Voltage Input	120Vac
Lumen output	960lm
Color Temperature	3000K,4000K,5000K
CRI	>80
Operating Temp.	-20℃~40℃
IP Rating	IP20
Certificates	ETL/cETL, Energy Star
Warranty	5 years
L70 life span	>50000Hrs
Beam Angle	120Degree
Dimmable	Yes(Triac)
Dimension	φ 180mm x H 13mm(φ 7” x H 0.5”)

Order Information

Item Number	Description	Power	Voltage Input	Dimmable	CCT	Lumen Output	Certificates
LEIRP5-6-12W-XXXX	6” Ultra-Slim LED Round Panel light	12W	120Vac	Yes(Traic)	3000k 4000K 5000k	960lm	ETL/cETL Energy Star

Lux Chart

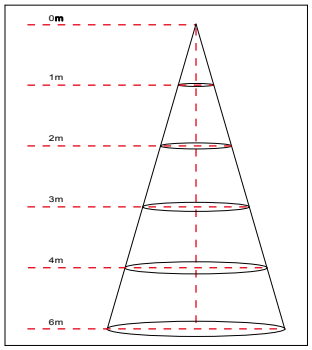

Height	Average Lux (lx)	Light range (dia.)
1M	73.95	322.4cm
2M	27.48	528.9cm
3M	12.21	793.4cm
4M	6.87	1057.8cm
6M	4.40	1322.3cm

Photometrics

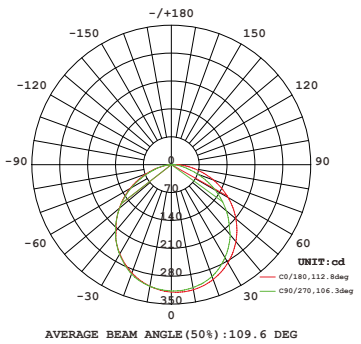

LEI 6” LED Round Panel light, 12 watt 960 Lumen, ETL/cETL & Energy Star Approved

Product Size

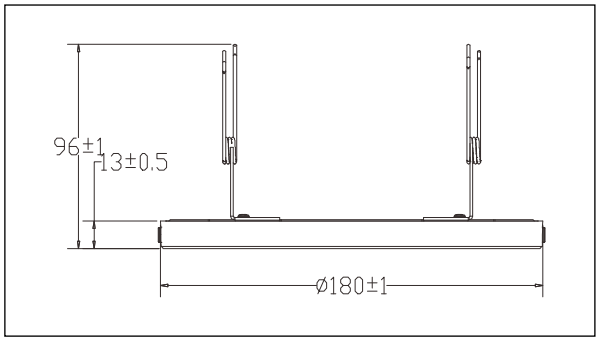

Installation

J-BOX Mount

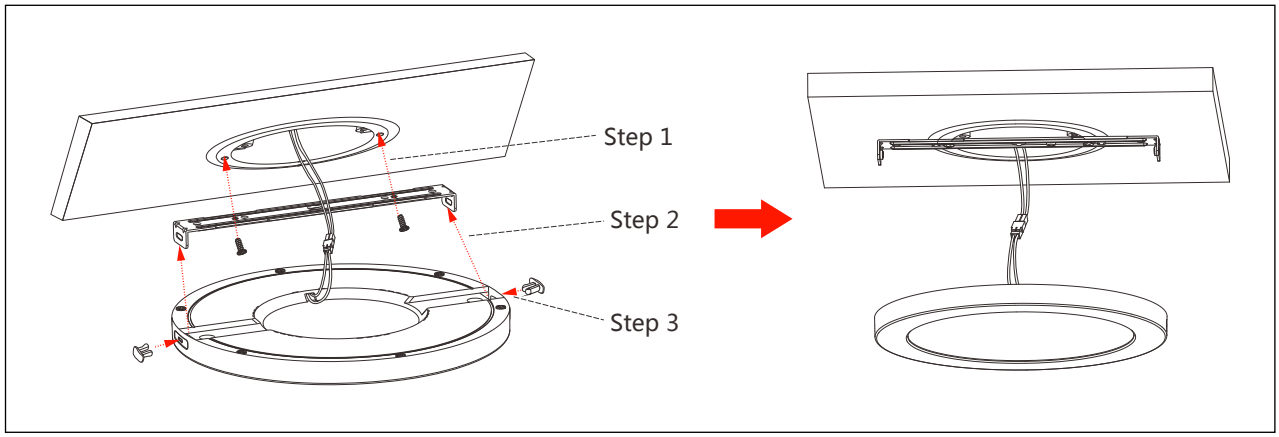

5” / 6” Retrofit

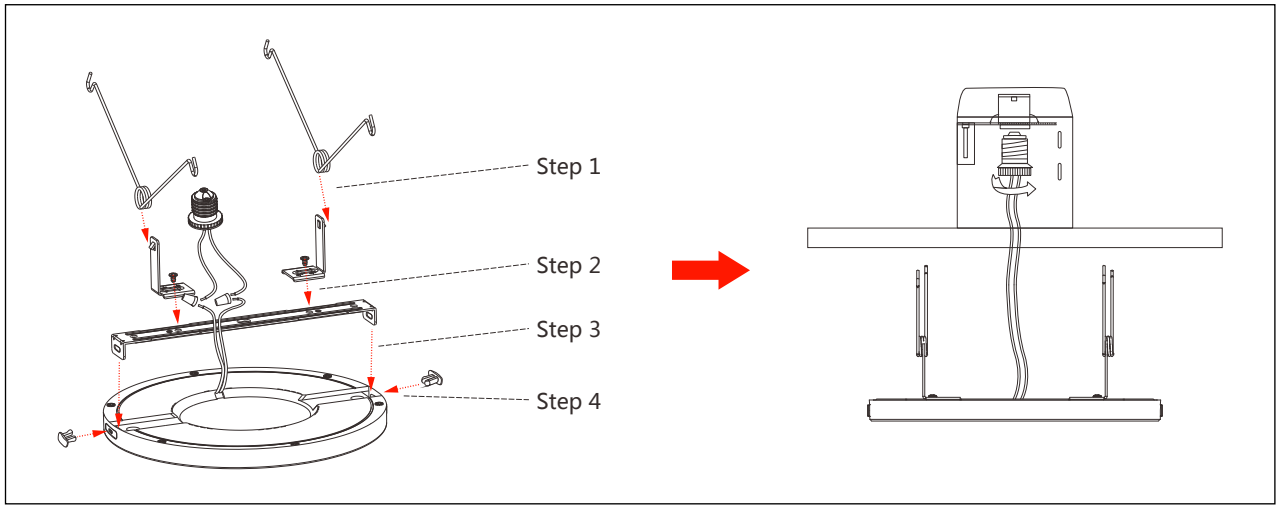

LED Energy Inc. **Main: (905) 538-7228** **Toll free: +1 (855) 264-2200**
174 West Beaver Creek Rd, Richmond Hill, ON. L4B 1B4

www.ledenergy.ca